Catalogue	MITO 2013-2018	
Category	5.2 WATER PUMP AND LINES	
Var.	01	1.3D + DIESEL
Rev.	00	

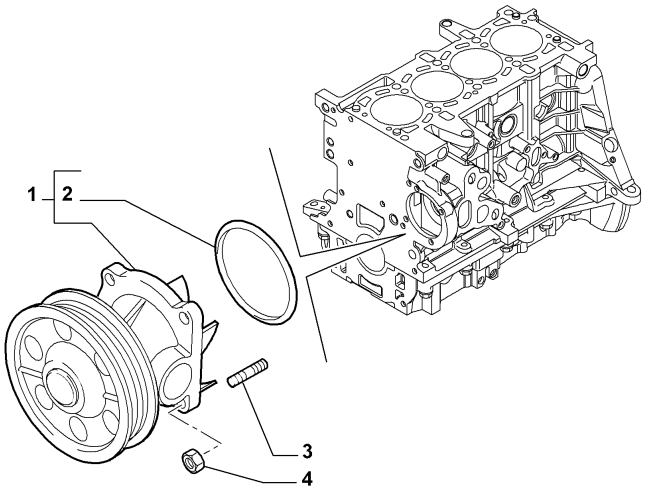

	Part Num.	Description	Compatibility	Modif.	Qty	Notes	Col.	Reman.
1	46815125	WATER PUMP, COMPL		C20180	01			
1	46338675	WATER PUMP, COMPL		D20180	01			
2	71732863	SEAL			01			
3	46820076	STUD, M6X9-22			04			
4	55191552	NUT, DIAM M6			04			

Legend	
1.3D	HORSE POWER (MARKET):
DIESEL	FUEL:DIESEL
20180	New water pump for new dynamic seal [DAT 28/10/2016]

Copyright © 2019 Alfa Romeo Owners Club | MiTo Register

MiTo 2013-2018

Catalogue	MITO 2013-2018	
Category	5.2 WATER PUMP AND LINES	
Var.	02	1.6D + DIESEL + 120HP
Rev.	00	

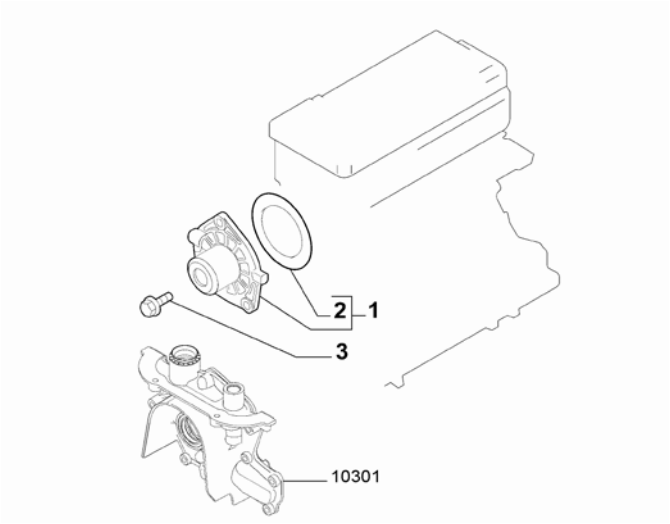

	Part Num.	Description	Compatibility	Modif.	Qty	Notes	Col.	Reman.
1	55268918	WATER PUMP, COMPL		C19258	01			
1	55269148	WATER PUMP, COMPL		D19258	01			
2	46772635	SEAL GASKET			01			
3	46804053	SCREW, M8X24			03			

Legend	
1.6D	HORSE POWER (MARKET):1598
DIESEL	FUEL:DIESEL
120HP	POWER:1.6 JTD EURO5 -1.4 FIRE TRB 120HP
19258	NEW WATER PUMP [DAT 13/11/2015]

Copyright © 2019 Alfa Romeo Owners Club | MiTo Register

Catalogue	MITO 2013-2018	
Category	5.2 WATER PUMP AND LINES	
Var.	03	1.4 + (8V, 16V)
Rev.	00	

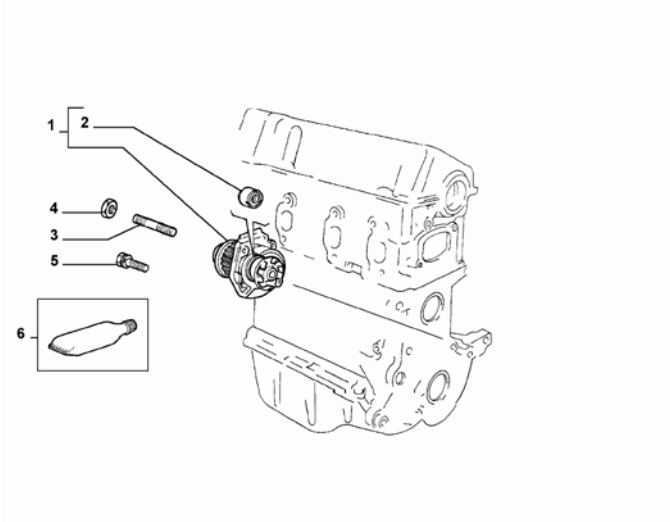

		Part Num.	Description	Compatibility	Modif.	Qty	Notes	Col.	Reman.
1	A	55284051	WATER PUMP, COMPL.TESMA			1			
1	A	6000100222	WATER PUMP, COMPL.TESMA			1			
2		71748938	SEAL GASKET, TESMA			1			
3		55209300	STUD			1			
4		14040614	NUT			1			
5		18750524	SCREW			3			
6		71753861	SEALER			1			

Legend	
1.4	HORSE POWER (MARKET):1370
16V	TOTAL NUMBER OF VALVES:16 VALVES
8V	TOTAL NUMBER OF VALVES:8 VALVES

Copyright © 2019 Alfa Romeo Owners Club | MiTo Register

MiTo 2013-2018

Catalogue	MITO 2013-2018	
Category	5.2 WATER PUMP AND LINES	
Var.	01	1.3D + DIESEL + 85HP + EURO5
Rev.	00	

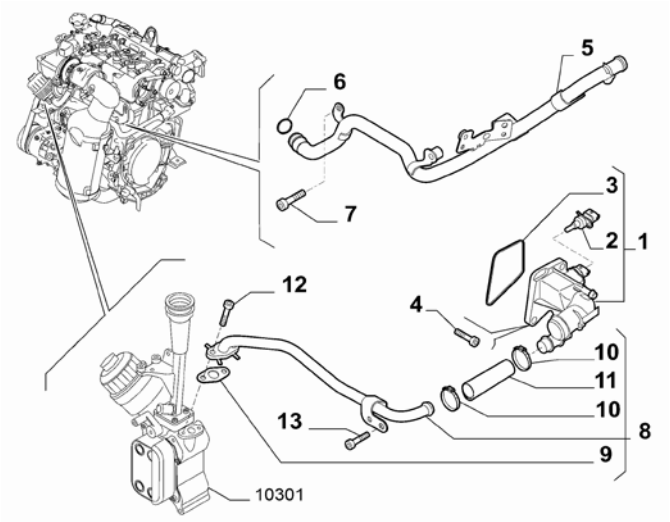

	Part Num.	Description	Compatibility	Modif.	Qty	Notes	Col.	Reman.
1	55233327	THERMOSTAT, COMPL	66M		01			
2	55206393	SENDING UNIT			01			
3	71738450	SEAL GASKET			01			
4	73502574	SCREW AND WASHERASSY, M8X30			02			
5	55218942	PIPE			01			
6	7792369	SEAL GASKET, 2,62X17,12			01			
7	55189538	SCREW, M6X16			02			
8	55211397	PIPE			01			
9	73502584	SEAL GASKET			01			
10	11447570	COLLAR, DIAM 20,5-23,0			02			
11	55209535	SLEEVE			01			
12	46339920	SCREW, M6X20			02			
13	55214854	SCREW, M6X32			01			

Legend	
66M	ECO KIT 2
1.3D	HORSE POWER (MARKET):
DIESEL	FUEL:DIESEL
EURO5	ECOLOGY:LIM.ECC PHASE 5
85HP	POWER:1.3 SDE 85HP EURO5

Copyright © 2019 Alfa Romeo Owners Club | MiTo Register

Catalogue	MITO 2013-2018	
Category	5.2 WATER PUMP AND LINES	
Var.	02	1.6D + DIESEL + 120HP
Rev.	00	

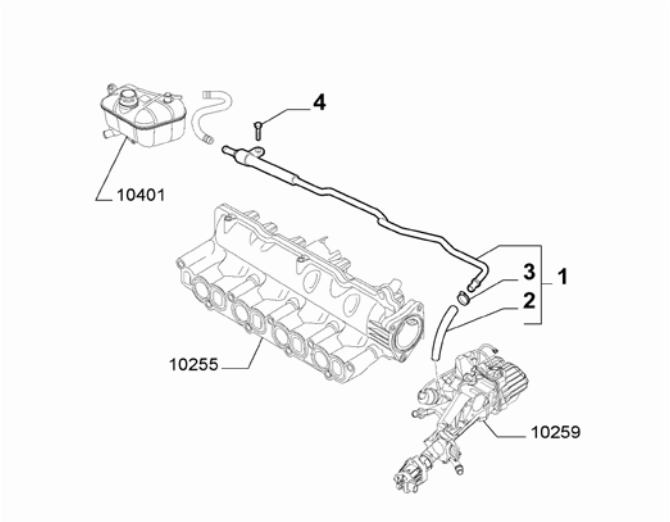

	Part Num.	Description	Compatibility	Modif.	Qty	Notes	Col.	Reman.
1	55218930	PIPE, COMPL		C15087	01			
1	55237976	PIPE, PIPES		D15087	01			
2	55205683	SLEEVE			01			
3	13125570	COLLAR, DIAM 13-14			03			
4	16596924	SCREW			01			

Legend	
1.6D	HORSE POWER (MARKET):1598
DIESEL	FUEL:DIESEL
120HP	POWER:1.6 JTD EURO5 -1.4 FIRE TRB 120HP
15087	DEGASSING PIPE [DAT 20/12/2010]

Copyright © 2019 Alfa Romeo Owners Club | MiTo Register

Catalogue	MITO 2013-2018	
Category	5.2 WATER PUMP AND LINES	
Var.	03	1.4 + 8V
Rev.	00	

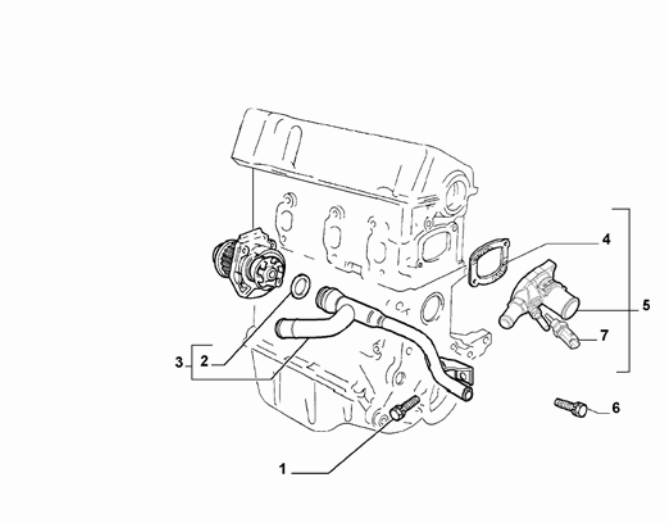

		Part Num.	Description	Compatibility	Modif.	Qty	Notes	Col.	Reman.
1		11612434	SCREW			1			
2		55185066	SEAL GASKET		C15956	1			
2		71776601	SEAL GASKET		D15956	1			
3		55188163	PIPE, COMPL.		C15956	1			
3	A	55245749	PIPE		D15956	1			
3	A	6000100157	PIPE		D15956	1			
4		71753377	SEAL GASKET			1			
5		55202176	THERMOSTAT			1			
6		18750624	SCREW			2			
7		55190791	SENDING UNIT			1			

Legend	
1.4	HORSE POWER (MARKET):1370
8V	TOTAL NUMBER OF VALVES:8 VALVES
15956	new water pump pipe and new seal [DAT 19/09/2012]

Copyright © 2019 Alfa Romeo Owners Club | MiTo Register

Catalogue	MITO 2013-2018	
Category	5.2 WATER PUMP AND LINES	
Var.	04	1.4 + TURBO + (135HP, 170HP)
Rev.	00	

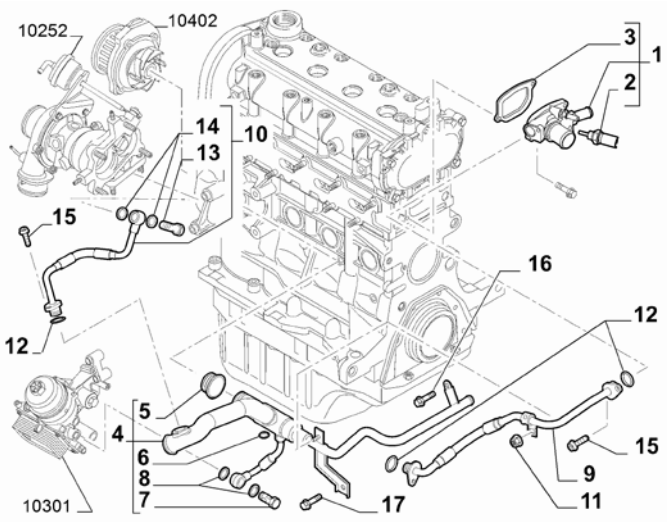

	Part Num.	Description	Compatibility	Modif.	Qty	Notes	Col.	Reman.
1	55215006	THERMOSTAT			01			
2	55190791	SENDING UNIT			01			
3	71753377	SEAL GASKET			01			
4	55229071	PIPE		C19318	1			
4	55267524	PIPE		D19318	1			
5	71776601	SEAL GASKET			1			
6	71751497	SEAL GASKET			01			
7	71773593	UNION			01			
8	71749207	SEAL GASKET			02			
9	55249231	PIPE		C19318	1			
9	55268935	PIPE		C19318	1			
10	55219159	PIPE			1			
11	55192174	NUT			01			
12	14457081	SEAL GASKET			03			
13	71773592	UNION			01			
14	71752001	SEAL GASKET			02			
15	55206778	SCREW			01			
16	55209733	SCREW			01			
17	11612434	SCREW, M6X16			1			

Legend	
TURBO	(ASPIRATED/TURBO):TURBO
1.4	HORSE POWER (MARKET):1370
170HP	POWER:1.4 FIRE 16V TURBO MULTIAIR 170HP EURO 5
135HP	POWER:1.4 FIRE 16V TURBO MULTIAIR 135 HP EURO 5
19318	REPLACED GREEN FILTER WITH SPIN ON OIL FILTER [DAT 31/05/2017, MOT 2288536]

Copyright © 2019 Alfa Romeo Owners Club | MiTo Register

MiTo 2013-2018

Catalogue	MITO 2013-2018	
Category	5.2 WATER PUMP AND LINES	
Var.	05	1.4 + 16V + 120HP
Rev.	00	

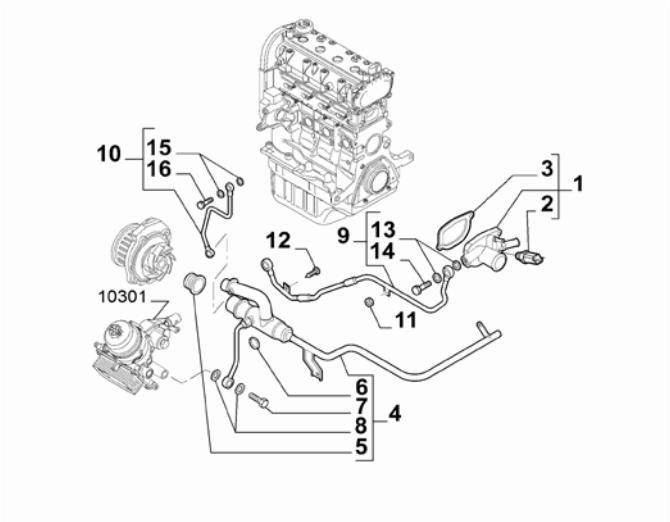

	Part Num.	Description	Compatibility	Modif.	Qty	Notes	Col.	Reman.
1	55208964	THERMOSTAT			01			
2	55190791	SENDING UNIT			01			
3	71753377	SEAL GASKET			01			
4	55229070	PIPE			1			
5	71776601	SEAL GASKET			1			
6	71751497	SEAL GASKET			01			
7	71773593	UNION			01			
8	71749207	SEAL GASKET			02			
9	55211895	PIPE			01			
10	55215387	PIPE			01			
11	55192174	NUT			01			
12	55206778	SCREW			01			
13	71769774	SEAL GASKET			04			
14	71769775	UNION			02			
15	71752001	SEAL GASKET			04			
16	71773592	UNION			02			

Legend	
1.4	HORSE POWER (MARKET):1370
120HP	POWER:1.6 JTD EURO5 -1.4 FIRE TRB 120HP
16V	TOTAL NUMBER OF VALVES:16 VALVES

Copyright © 2019 Alfa Romeo Owners Club | MiTo Register

Catalogue	MITO 2013-2018	
Category	5.2 WATER PUMP AND LINES	
Var.	06	1.3D + DIESEL + EURO6
Rev.	00	

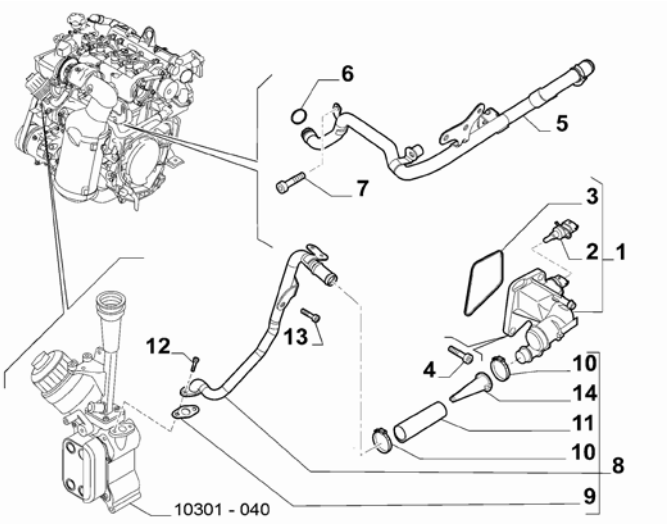

	Part Num.	Description	Compatibility	Modif.	Qty	Notes	Col.	Reman.
1	55233327	THERMOSTAT, COMPLETE			1			
2	55206393	SENDING UNIT			1			
3	71738450	SEAL GASKET			1			
4	73502574	SCREW AND WASHERASSY, M8X30			2			
5	55218942	PIPE			1			
6	14457385	SEAL GASKET, 2,6X17,12			1			
7	55189538	SCREW, M6X16			2			
8	55270256	PIPE			1			
9	73502584	SEAL GASKET			1			
10	13127470	COLLAR, DIAM 21-22			2			
11	55270883	SLEEVE			1			
12	46339920	SCREW, M6X20			2			
13	55214854	SCREW, M6X32			1			
14	55270884	FILTER			1			

Legend	
1.3D	HORSE POWER (MARKET):
DIESEL	FUEL:DIESEL
EURO6	ECOLOGY:EURO 6

Copyright © 2019 Alfa Romeo Owners Club | MiTo Register

Catalogue	MITO 2013-2018	
Category	5.2 WATER PUMP AND LINES	
Var.	01	875CC + 85HP + TURBO + PETROL
Rev.	00	

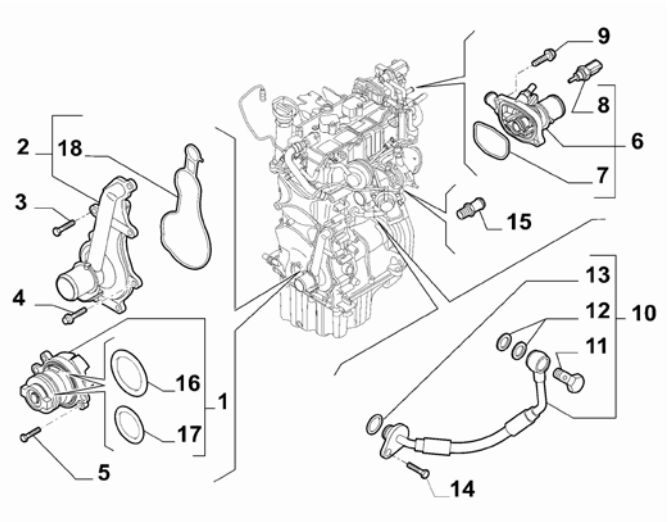

	Part Num.	Description	Compatibility	Modif.	Qty	Notes	Col.	Reman.
1	55225394	WATER PUMP		C18233	1			
1	55270499	WATER PUMP		D18233	1			
2	55229063	COVER			1			
3	18750524	SCREW			6			
4	55229981	SCREW			2			
5	55228543	SCREW			2			
6	55250824	THERMOSTAT			1			
7	71753377	SEAL GASKET			1			
8	55190791	SENDING UNIT			1			
9	55190247	SCREW			2			
10	55244332	HOSE			1			
11	71769362	UNION			1			
12	55227760	SEAL GASKET			2			
13	14456981	SEAL GASKET			1			
14	55206778	SCREW			1			
15	55239822	UNION			1			
16	71769491	SEAL GASKET			1			
17	71769490	SEAL GASKET		C18233	1			
17	71778234	SEAL GASKET		D18233	1			
18	73504016	SEAL GASKET			1			

Legend	
TURBO	(ASPIRATED/TURBO):TURBO
875CC	HORSE POWER (MARKET):875
PETROL	FUEL:PETROL
85HP	POWER:1.3 SDE 85HP EURO5
18233	NEW WATER PUMP [MOT 274786]

Copyright © 2019 Alfa Romeo Owners Club | MiTo Register

Catalogue	MITO 2013-2018	
Category	5.2 WATER PUMP AND LINES	
Var.	02	875CC + TURBO + 105HP + PETROL
Rev.	00	

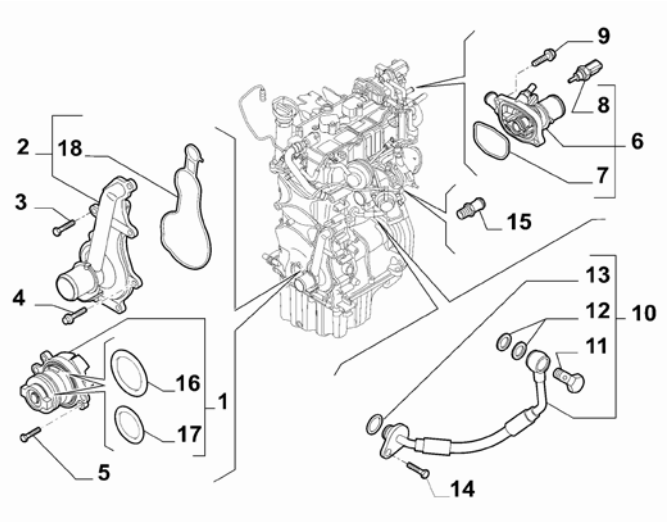

	Part Num.	Description	Compatibility	Modif.	Qty	Notes	Col.	Reman.
1	55225394	WATER PUMP		C18233	1			
1	55270499	WATER PUMP		D18233	1			
2	55229063	COVER			1			
3	18750524	SCREW			6			
4	55229981	SCREW			2			
5	55228543	SCREW			2			
6	55246827	THERMOSTAT			1			
7	71753377	SEAL GASKET			1			
8	55206393	SENDING UNIT			1			
9	55190247	SCREW			2			
10	55249023	HOSE			1			
11	71769362	UNION			1			
12	55227760	SEAL GASKET			2			
13	14456981	SEAL GASKET			1			
14	55206778	SCREW			1			
15	55239822	UNION			1			
16	71769491	SEAL GASKET			1			
17	71769490	SEAL GASKET		C18233	1			
17	71778234	SEAL GASKET		D18233	1			
18	73504016	SEAL GASKET			1			

Legend	
TURBO	(ASPIRATED/TURBO):TURBO
875CC	HORSE POWER (MARKET):875
PETROL	FUEL:PETROL
105HP	POWER:0.9 TWINAIR 105HP
18233	NEW WATER PUMP [MOT 274786]

Copyright © 2019 Alfa Romeo Owners Club | MiTo Register